ROBINAIR®

AN SPX BRAND

Operating Instructions

Model 17580

Air Conditioning Component Flusher

ROBINAIR
AN SPX BRAND

Model 17580
Air Conditioning Component Flusher
80–150 psi Supply Air Pressure

SAFETY DEFINITIONS: Follow all WARNING, CAUTION, and NOTE messages in this manual. These messages are defined as follows: WARNING indicates a potentially hazardous situation which, if not avoided, could result in death or serious injury; CAUTION indicates a potentially hazardous situation which, if not avoided, could result in minor or moderate injury, and / or property damage; and NOTEs provide clarity and helpful tips. These messages cover situations ROBINAIR is aware of. ROBINAIR cannot know, evaluate, and advise you regarding all possible hazards. You must ensure conditions and procedures do not jeopardize your personal safety.

COPYRIGHT: No part of this manual may be reproduced, stored in a retrieval system, or transmitted in any form or by any means (electronic, mechanical, photocopy, recorded, or otherwise) without the prior written permission of ROBINAIR.

DISCLAIMER: All information, illustrations, and specifications contained in this manual are based on the latest information available at the time of publication. The right is reserved to make changes at any time without obligation to notify any person or organization of such revisions or changes. Further, ROBINAIR shall not be liable for errors contained herein or for incidental or consequential damages (including lost profits) in connection with the furnishing, performance, or use of this material. If necessary, obtain additional health and safety information from the appropriate government agencies and the vehicle, refrigerant, and lubricant manufacturers.

WARNINGS

- **Study, understand, and follow all warnings in the operator's manual before operating this unit. If the operator cannot read these instructions, operating instructions and safety precautions must be read and discussed in the operator's native language.**

  Si el operador no puede leer el inglés, las instrucciones de operación y las precauciones de seguridad deberán leerse y comentarse en el idioma nativo del operador.

  Si l'utilisateur ne peut lire l'anglais, les instructions et les consignes de sécurité doivent lui être expliquées dans sa langue maternelle.

- **This unit must be operated by qualified personnel who are familiar with air conditioning and refrigeration systems, solvents, and the danger of pressurized components.**

- **Wear eye protection and protective clothing when working with solvents. Contact with solvent may cause personal injury. Even while wearing protective goggles, do not look into a component to observe airflow.**

- **To prevent an electrical shock or an explosion, first ground the flusher to the vehicle by attaching the ground clamp to the negative battery terminal or other source of ground on the vehicle.**

- **Do not operate this equipment near an open flame.**
- **Operate the unit in a well-ventilated area. Ensure there is adequate ventilation in the vehicle servicing area.**

- **DO NOT breathe solvent vapor or mist. Exposure may irritate eyes, nose, and throat. If accidental system discharge occurs, ventilate work area before resuming service.**

- **Use only Robinair Power Flush solvent. The use of unapproved solvents may cause damage to the A/C system or equipment and be hazardous to the operator.**
- **Disconnect the unit from the air pressure source before beginning service work.**
- **Avoid solvent spillage on painted areas. Solvents can peel paint from a vehicle. Read warnings on solvent containers.**
- **Follow solvent manufacturer's recommendations for handling and disposing solvents. Use only approved solvents.**

Table of Contents

Introduction.....2
Component Location.....3
Initial Setup.....4
Operating Guidelines.....4
Operating Instructions.....5
    Flushing a component.....6
    Purging a component.....7
Maintenance.....7
    Solvent Replacement.....7
    Solvent Filter Replacement.....7
    Charcoal Filter Element Replacement.....7
    Coalescent Filter Element Replacement.....7
Accessories.....8
Replacement Part Numbers.....8
Plumbing Diagram.....9
Limited Warranty.....inside back cover

Introduction

Use the 17580 Air Conditioning Component Flusher to clean unwanted oil, residue, and contaminants from inside A/C condensers and evaporators. The flusher uses a pulsating action to circulate solvent through components to loosen and dissolve unwanted material inside the components. The air-agitation feature allows the user to control the flow of bubbles through the solvent for further agitation inside the components. The flusher then evaporates solvent from components after flushing by circulating dry air through the components at a high rate. The 17580 Flusher comes equipped with a carbon filter to reduce solvent odors.

The 17580 Flusher has been factory tested and meets Robinair's stringent quality standards. This unit* will provide you with years of reliable service with minimal maintenance.

Read and understand all warnings and cautions before using the flusher.

* "Unit" describes the 17580 Flusher throughout this manual.

Front View

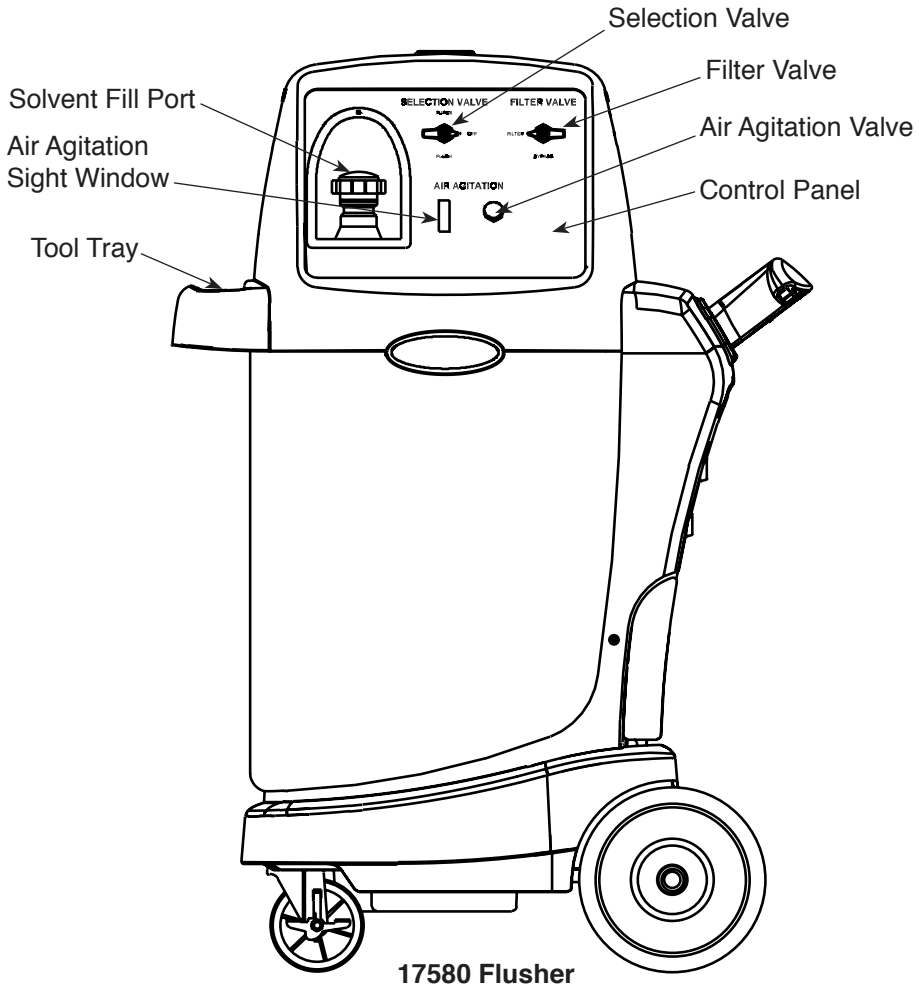

17580 Flusher

INST0991

© 2003 SPX

Inside Back View

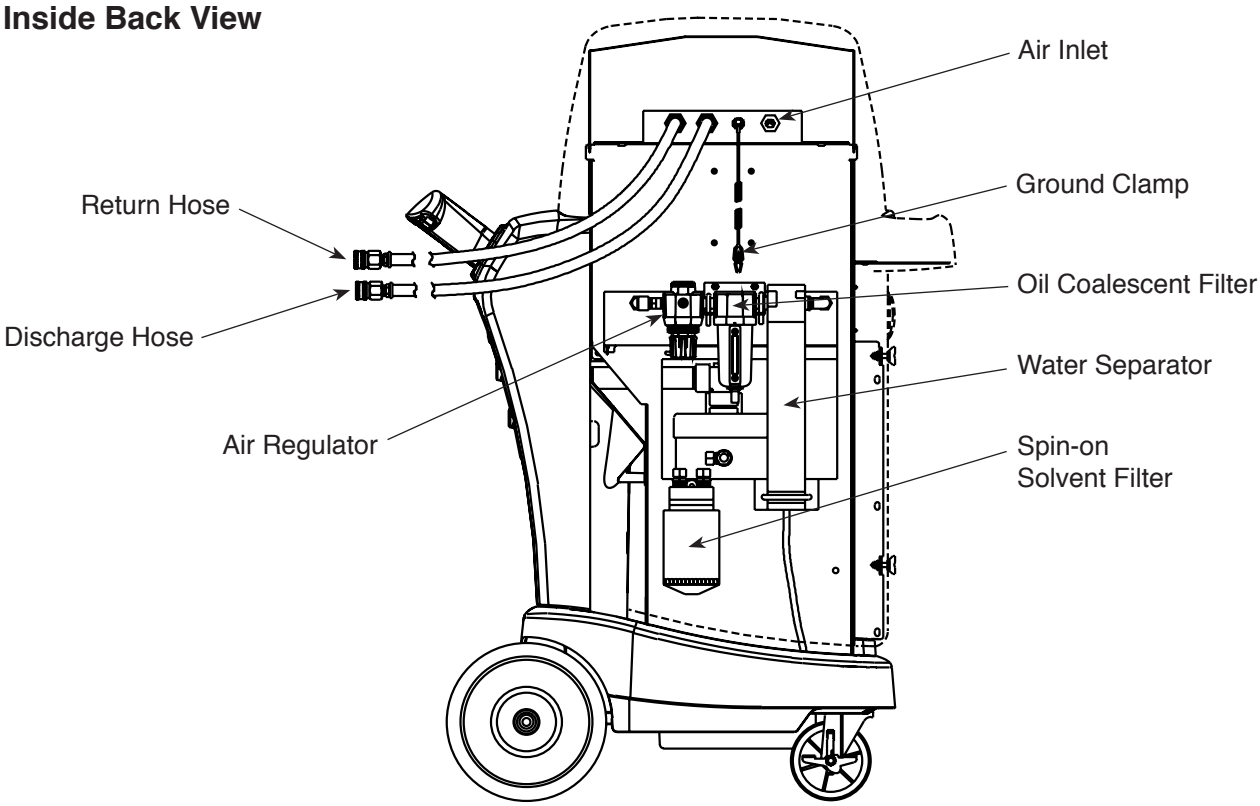

Side View

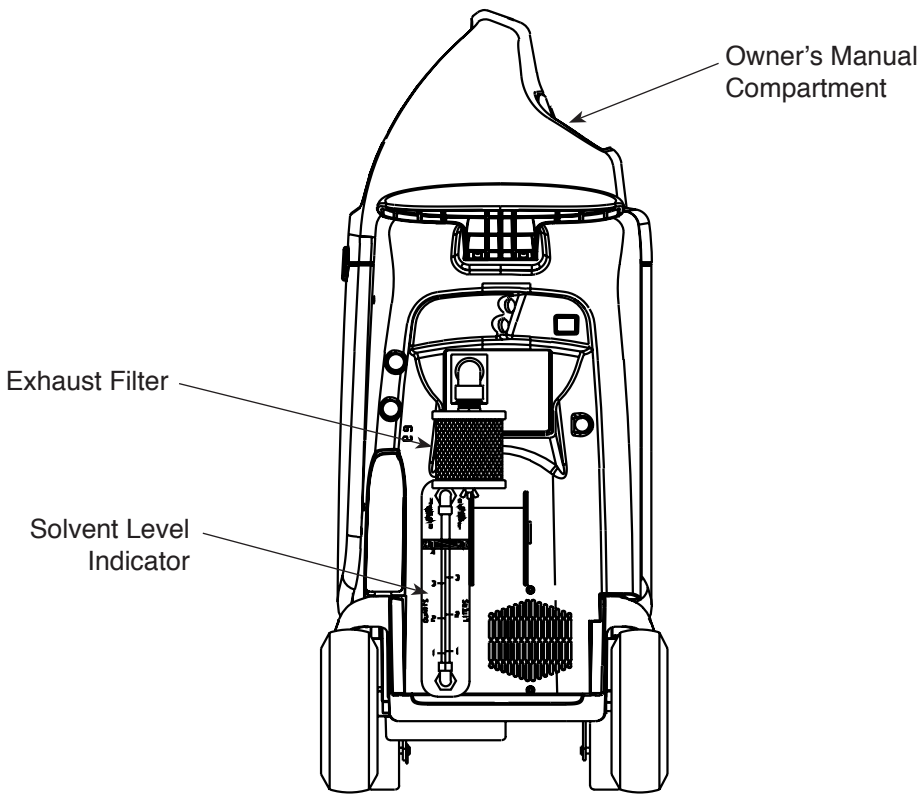

Initial Setup

Connect a 1/4 in. external air fitting (not included) to the air inlet located on the unit's rear panel.

WARNING!

Wear eye protection and protective clothing when working with solvents. Contact with solvent may cause personal injury.

DO NOT breathe solvent vapor or mist. Exposure may irritate eyes, nose, and throat. If accidental system discharge occurs, ventilate work area before resuming service.

Operating Guidelines

Before operating this unit, read and follow the instructions and warnings in this manual. Verify all safety devices are functioning correctly before beginning a procedure.

Required: One gallon of solvent is needed for the flushing procedure. Foaming type flushing solvents are not recommended because foam interferes with the pulsing and purging action of the flusher. Also, an adapter fitting kit may be necessary for connecting to some flusher service couplers. See ACCESSORIES.

Fill to Mark: Do not overfill the flushing tank. Fill to only the full mark on the solvent level indicator.

Solvent Reuse: Follow solvent manufacturer's suggestions regarding the number of times solvent may be used before replacement. The flusher will perform its functions even if the solvent is too diluted to remove contaminants from the A/C system. See REPLACEMENT PARTS.

Filter Replacement: The flusher is equipped with a replaceable particle filter to clean the solvent during the flush operation. The particle filter is a non-bypass filter and must be replaced every time fresh solvent is installed in the flusher. See REPLACEMENT PARTS.

Activated Carbon Filter: This unit contains an activated carbon filter that limits emissions and odors during the flushing and purging operations. The filter element can be replaced if odors become noticeably stronger during operation of the unit. See REPLACEMENT PARTS.

© 2003 SPX

WARNING!

To prevent eye injury, do not look into a component to observe airflow even while wearing protective goggles.

Operating Instructions

Use the following steps to operate the flusher:

1. Turn the selection valve on the control panel to the OFF position.
2. Ground the flusher to the vehicle by attaching the ground clamp to the negative battery terminal or other source of ground on the vehicle.
3. Add one gallon of flush solvent to the fill port.
4. Connect shop air to the unit's air inlet (80–150 psi).
5. Install A/C component flush adapters as required to the vehicle A/C components to be flushed. Connect the flusher discharge hose to the inlet / outlet of the component being flushed.

   Recommended Flush/Backflush Procedure:

   When flushing a condenser and/or high pressure liquid lines, flush from the outlet end of unit first; then backflush in the opposite direction.

   When flushing an evaporator, flush from the inlet side of the unit to the outlet first; then backflush in the opposite direction.

   This sequencing will ensure the maximum flushing action is obtained. Solvent purges from the system faster after the flushing operations are completed.
6. Connect the return hose to the remaining adapter.

CAUTION:
To prevent an electrical shock or an explosion, ground the flusher to the vehicle before use by attaching the ground clamp to the negative battery terminal or other source of ground on the vehicle.

Avoid solvent spillage on painted areas. Solvents can peel paint from a vehicle. Read all warnings on solvent containers.

This manual contains important safety procedures concerning the operation, use, and maintenance of this product. Failure to follow the instructions contained in this manual may result in serious injury. If you are unable to understand any of the contents of this manual, please bring it to the attention of your supervisor. Do not operate this equipment unless you have read and understand the contents of this manual.

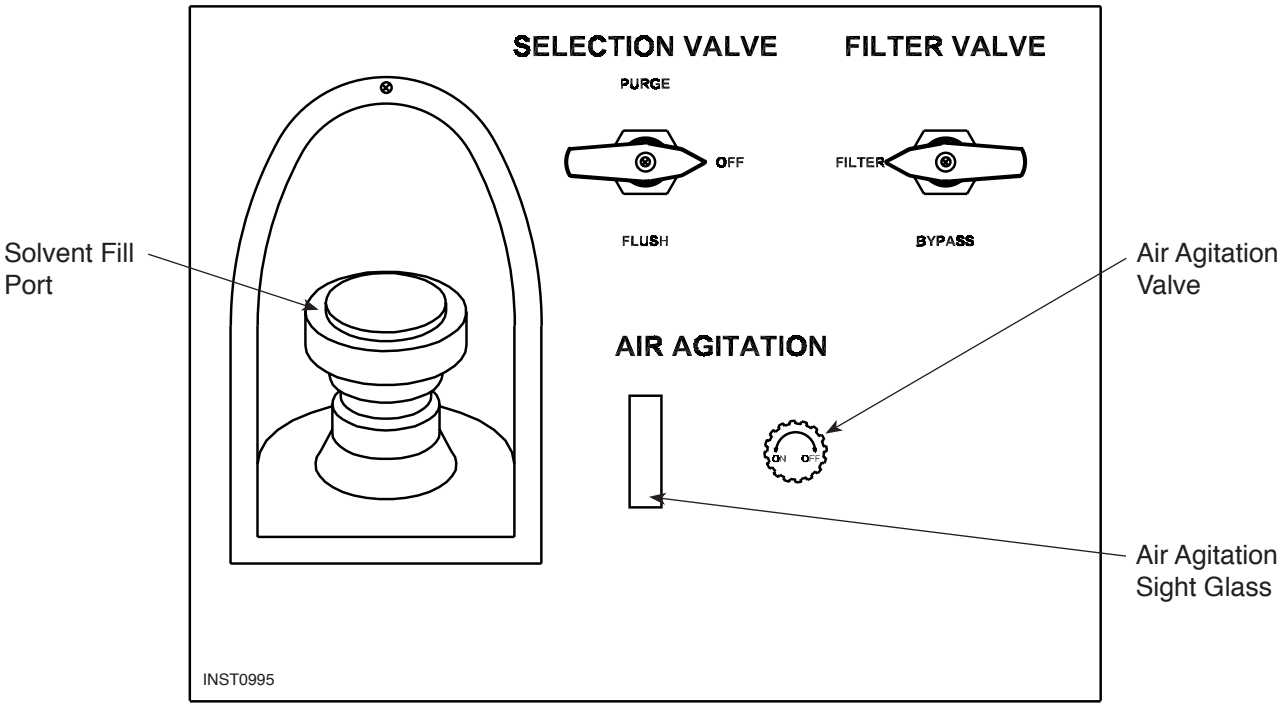

Control Panel

Flushing a Component

Use the following steps to flush a component:

1. Turn the filter valve to FILTER.
2. Turn the selection valve to FLUSH.
3. The AIR AGITATION valve can be opened during the flush cycle to control the amount of air bubbles being injected into the solvent. The intensity of the air agitation can be viewed through the sight glass on the control panel.
4. After flushing for 20 minutes, turn the selection valve to OFF.

Purging a Component

Use the following steps to purge the solvent from a component:

1. Open the selection valve slightly (toward PURGE) until most liquid solvent has been purged from the inlet and discharge hoses.
2. Turn the filter valve to BYPASS.
3. **Slowly** turn the selection valve all the way to PURGE.

   Note: Slowly opening the selection valve to PURGE reduces solvent odors and extends the life of the carbon filter element.
4. Purge the system for a minimum of 30 minutes to completely evacuate any traces of flushing solvent from the component.
5. Turn the selection valve to OFF.

© 2003 SPX

Maintenance

Solvent Replacement

Follow the solvent manufacturer's recommendations regarding the number of times solvent may be used before replacement. It is strongly recommended that the used solvent be removed from the machine immediately after a FLUSH/PURGE cycle.

1. Place the end of the discharge hose in a suitable waste container.
2. Verify the selection valve is OFF and shop air is connected.
3. Turn the selection valve to FLUSH.
4. Turn the selection valve to OFF when the solvent is evacuated from the machine.

Solvent Filter Replacement

Replace the solvent filter each time the solvent is replaced. A non-bypass filter, such as Motorcraft FL1A, Purolator L30001, Champ PH-8-A, or equivalent, should be used.

1. Open the back door of the unit's protective covering.

   Note: To unlock the door, turn the two screws 1/4 turn counterclockwise.
2. Remove the filter by turning it counterclockwise.
3. Hand tighten the new filter in a clockwise direction.

Carbon Filter Element Replacement

The carbon filter element should be replaced when odors become noticeably stronger during the purge cycle.

1. Remove the filter retaining plate by removing the wing nut on the filter housing.
2. Remove and replace the filter element.
3. Replace the filter retaining plate and wing nut.

Coalescent Filter Element Replacement

If oil is visible in the coalescing filter bowl, it can be drained by toggling the valve on the bottom of the bowl.

The coalescent filter element can be replaced as follows:

1. Open the back door of the unit's protective covering.

   Note: To unlock the door, turn the two screws 1/4 turn counterclockwise.
2. Push up on the filter bowl, and turn the bowl 1/8 turn counterclockwise to disengage the bowl from the filter housing.
3. Remove the filter element by unscrewing the nut on the bottom of the filter.
4. Install the new filter element, followed by the filter bowl.

Accessories

Part No.	Description
17607	Universal Flushing Adapter Kit
17581	Adapter Fitting (included; use to adapt hoses to 17607 Flushing Adapter Kit)

Replacement Part Numbers

Part No.	Description
17565	Power Flush Solvent (gallon; six per carton)
17609	Power Flush Solvent (quart; six per carton)
17586	Solvent Filter
17577	Activated Carbon Filter Element
17518	Coalescent Filter Element
540649	Fill Tube

© 2003 SPX

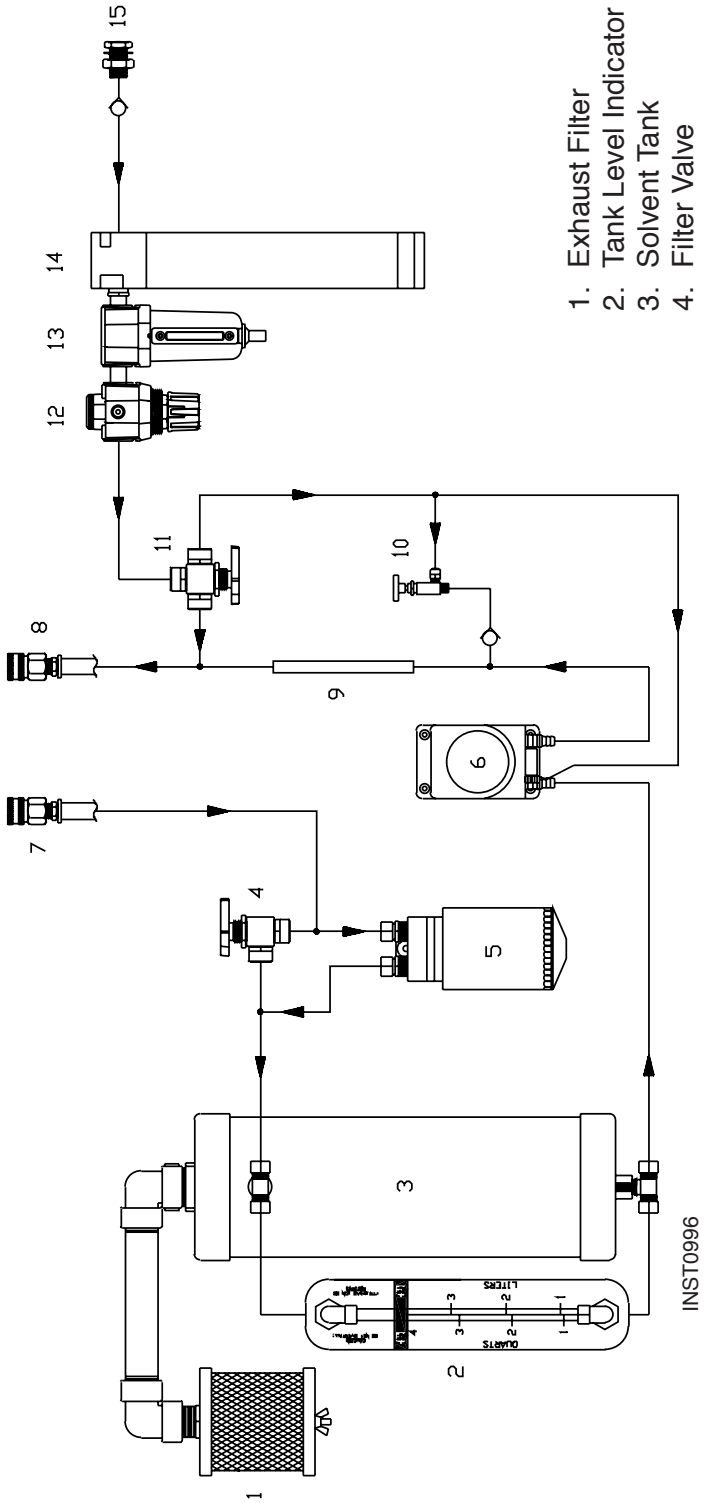

1. Exhaust Filter
2. Tank Level Indicator
3. Solvent Tank
4. Filter Valve
5. Spin-on Filter
6. Liquid Pump
7. Return Hose
8. Discharge Hose
9. Air Agitation Sight Glass
10. Air Agitation Valve
11. Selection Valve
12. Air Regulator
13. Coalescing Filter
14. Water Separator
15. Compressed Air Supply

Notes

© 2003 SPX

Notes

Notes

© 2003 SPX

Limited Warranty

This product is warranted to be free from defects in workmanship, materials, and components for a period of one year from date of purchase. All parts and labor required to repair defective products covered under the warranty will be at no charge. The following restrictions apply:

1. The limited warranty applies to the original purchaser only.
2. The warranty applies to the product in normal usage situations only, as described in the owner's manual. The product must also be serviced and maintained as specified.
3. If the product fails, it will be repaired or replaced at the option of the manufacturer.
4. Warranty service claims are subject to factory inspection for product defect(s).
5. The manufacturer shall not be responsible for any additional costs associated with a product failure including, but not limited to, loss of work time, and un-authorized shipping and / or labor charges.
6. All warranty service claims must be made within the specified warranty period. Proof-of-purchase date must be supplied to the manufacturer.
7. Transportation charges for warranty service will be reimbursed by the factory upon verification of the warranty claim and submission of a freight bill for normal ground service. Approval from the manufacturer must be obtained prior to shipping to an authorized service center.

This Limited Warranty does not apply if:

- The product, or product part, is broken by accident.
- The product is misused, tampered with, or modified.

Call our toll-free
Technical Support Line

1-800-822-5561

in the continental U.S. or Canada
or visit our web site

www.robinair.com

In all other locations, contact your local distributor. To help us serve you better, be prepared to provide the model number, serial number, and date of purchase of the unit.

To validate your warranty, complete the warranty card attached to the unit, and return it within ten days from the date of purchase.

NATIONWIDE NETWORK OF AUTHORIZED SERVICE CENTERS

If your unit needs repair or replacement parts, contact the service center in your area. For help in locating a service center, visit www.robinair.com, or call the toll-free technical support line.

Due to ongoing product improvements, we reserve the right to change design, specifications, and materials without notice.

SPX

655 EISENHOWER DRIVE
OWATONNA, MN 55060-0995 USA

TECH SERVICES	800	822	5561
FAX	866	259	1241
CUSTOMER SERVICE	800	533	6127
FAX	800	322	2890

www.robinair.com

519395 Rev. C January 17, 2011
© 2003 SPX